USER OPERATION MANUAL

QUICKSLIDE™ HEMAPRO | HARDY DIAGNOSTICS A Culture of Service™

061316TR

Table of Contents

Congratulations!

You have made an excellent choice for your Lab. Hardy Diagnostics thanks you for the trust you have placed in our products and services.

This operating manual has been designed to help you gain an understanding of the operation and application of our HemaPRO Automated Hematology stainer. For optimal utilization of all functions, we recommend that you thoroughly study this manual prior to beginning operation.

This manual has been prepared as an aid for all operations and user maintenance, which can be carried out in your facility.

The QuickSlide™ Quality Management System

This product is supplied by Hardy Diagnostics in accordance with its quality management system, which complies with the U.S. Food and Drug Administration's (FDA's) Quality Systems Regulation (QSR) and current Good Manufacturing Practices (cGMP) contained in Title 21 Part 820 of the Code of Federal Regulations (CFR). The company's manufacturing establishments are registered, and its medical devices are listed with the FDA. In addition, Hardy Diagnostics' quality management system is certified to ISO 13485 for medical devices.

Our devices for the medical laboratory are developed, produced, and distributed according to the requirements of ISO 13485.

Unpacking and Inspecting

Carefully unpack the HemaPRO and accessories. Check for damage incurred during transit. Keep all packing material until you are sure the unit operates properly. Any damage to the shipping box should be reported to the responsible carrier. These instructions must be followed in order to support your claim.

Set-up assistance for the HemaPRO may be obtained by calling the Technical Service Department of QuickSlide™ at (800) 266-2222 (option 2) during the hours of 8 a.m.to 5 p.m. Pacific Standard Time, Monday through Friday. Alternatively, you may locate Unit Installation (Section 9.0) in this User Manual for quick set-up.

Important: Retain this operating manual for future use.

QuickSlide™
800-266-2222 (option, 2)

www.HardyDiagnostics.com
www.QuickSlide.com
Sales@HardyDiagnostics.com

1.0 Instrument Specifications

Dimensions/Weight	Width 30.48 cm (12 in.) Height 26.67 cm (10.5 in.) Depth 27.94 cm (11 in.) Weight 4.5 kg (10.00 lbs.)
Power Requirements	Input 100-240V, 50-60 Hz, 0.8 A Standard power cord is supplied to meet local standards. Output 12V, 2.0A
Temperature, Ambient Operation	16-32 Degrees C (60-90 Degrees F)
Humidity	0 to 95%, without condensation
Operator Adjustments	Individual adjustable stain times on both blood and marrow stain cycles Adjustable sound volume control
Operator Entry	Keypad overlay
Standards	IEC-61010-1:2010 (Third Edition) EN55022; CISPR 22 Ed. 6.0:2008 Class A CFR 47, Part 15, Subpart B, Class A, 2011 ICES-003 Issue 4, 2004 CAN/CSA-CIE/IEC CISPR 22;02 Class A EN61326-1: 2010
Warranty	One-Year Standard
Symbols	| – Power On O – Power Off  Caution – Refer to marked paragraphs in this manual for details.

2.0 Work Area Requirements

The Reagent Supply Kit should be positioned at the **same** level as the instrument on the counter immediately behind the instrument. The HemaPRO has a flat base in the rear on which the reagents may be positioned.

NOTE: Do not place reagents above or below the instrument.

The HemaPRO uses an external power supply module that requires an input of 50-60 Hz, 100-240V, 0.8 A. This unit requires power from a grounded outlet. The HemaPRO should only be used with the provided power cord. The power supply is a Class I supply that must be connected to an earthed (grounded) main power outlet. Failure to connect the HemaPRO as specified will prevent the electrical safety protection features to function as designed.

The HemaPRO has one waste tube which drains all of the waste fluids. The HemaPRO drain line can be placed into a customer designated disposal container to accommodate the waste fluids according to your facility and local regulations.

The HemaPRO is pre-installed with a tubing set to connect the instrument to each reagent. Each reagent supply line is equipped with a cannula (rigid tube) to submerge in the specified reagent supply container. Labels attached to those lines indicate which reagent is to be used with each line.

3.0 Introduction

This User Manual is provided to guide the user in all aspects of unit set-up, operational use, and user-level maintenance of the QuickSlide™ HemaPRO Automated Hematology stainer unit.

The HemaPRO microscope slide stainer is capable of automatically performing a hematology stain (Wright's-Giemsa) sequence on a slide containing a biological specimen for *in vitro* diagnostic use. This instrument accepts standard thickness 1"x3"x1mm glass slides that are frosted and pre-cleaned (Cat. No PF72P)

The HemaPRO has two programmed settings – a setting for blood smears and a setting for bone marrow smears – with specific stain durations that are customizable for each. The cuvette holds one slide at a time. The chamber is sequentially filled with stain, buffer, and rinse by use of peristaltic pumps under the front cover. Once staining and rinsing has been completed, the slide quality will be best when promptly removed from the cuvette and blotted or air dried.

3.1 Operator Responsibility – Safety Instructions

The HemaPRO ensures safe operation when installed, operated, and maintained according to common safety regulations. This section explains the potential dangers that may arise when operating the HemaPRO.

It is the operator's responsibility to be properly qualified to operate the HemaPRO. The operator and laboratory personnel are advised to refer to this User Manual and the set-up letter that is packaged with the unit.

In addition, the operator must be familiar with good laboratory practices and safety precautions when processing specimens with potential blood-borne pathogens.

4.0 Materials Required but Not Provided

Standard microbiological supplies are required, but not provided. These may include but are not limited to:

- Wright-Giemsa Stain Kit, Original (HP1BSK)
- HemaPRO Replacement Tubing Kit (HP1RT)
- ProSlide™ Frosted Microscope Slides (PF72P)
- Cuvette Cleaning Swabs (QS1001)
- Bibulous Paper (28511007)
- Methanol 32oz. (VMT032)
- Coplin Jars (VCJ001)
- Microscope Lens Cleaner (Z97)
- Lens Paper (52846001)
- Immersion Oil (Z95)
- Microscope (MRP5000)

5.0 Ordering Information

If additional supplies are needed, Reagent Stain Kits and Tubing Kits can be ordered through Hardy Diagnostics Customer Service. Call (800) 266-2222 (option 1), or go to www.HardyDiagnostics.com. Alternatively, you may contact your preferred distributor.

6.0 HemaPRO Stain Kit

The HemaPRO accomplishes automatic hematology staining by systematically staining, buffering, and rinsing the provided biological specimen. It is critical for the success of this automated process that these unique reagents are obtained from Hardy Diagnostics QuickSlide™.

Every reagent kit includes a Stain Activation Module that is required to be installed in the HemaPRO before use. Attempting to operate the HemaPRO without properly installing, or swapping out the Stain Activation Module will result in a system error, preventing any further user operation. For additional information on this error, please refer to Section 12.2.

We offer a Hematology stain kit that contains a special stain formulation for enhanced cell quality:

6.1 HP1BSK: Wright-Giemsa Stain Kit, Original

6.1.1 Wrights-Giemsa Stain Kit, Original provides our users with a more traditional Wrights-Giemsa stain.

6.1.1.1 Wrights Giemsa Stain will appear dark blue/purple.

6.1.1.2 Wrights-Giemsa Buffer will appear clear in color.

6.1.1.3 Wrights-Giemsa Rinse will appear clear in color.

7.0 Instrument Diagram

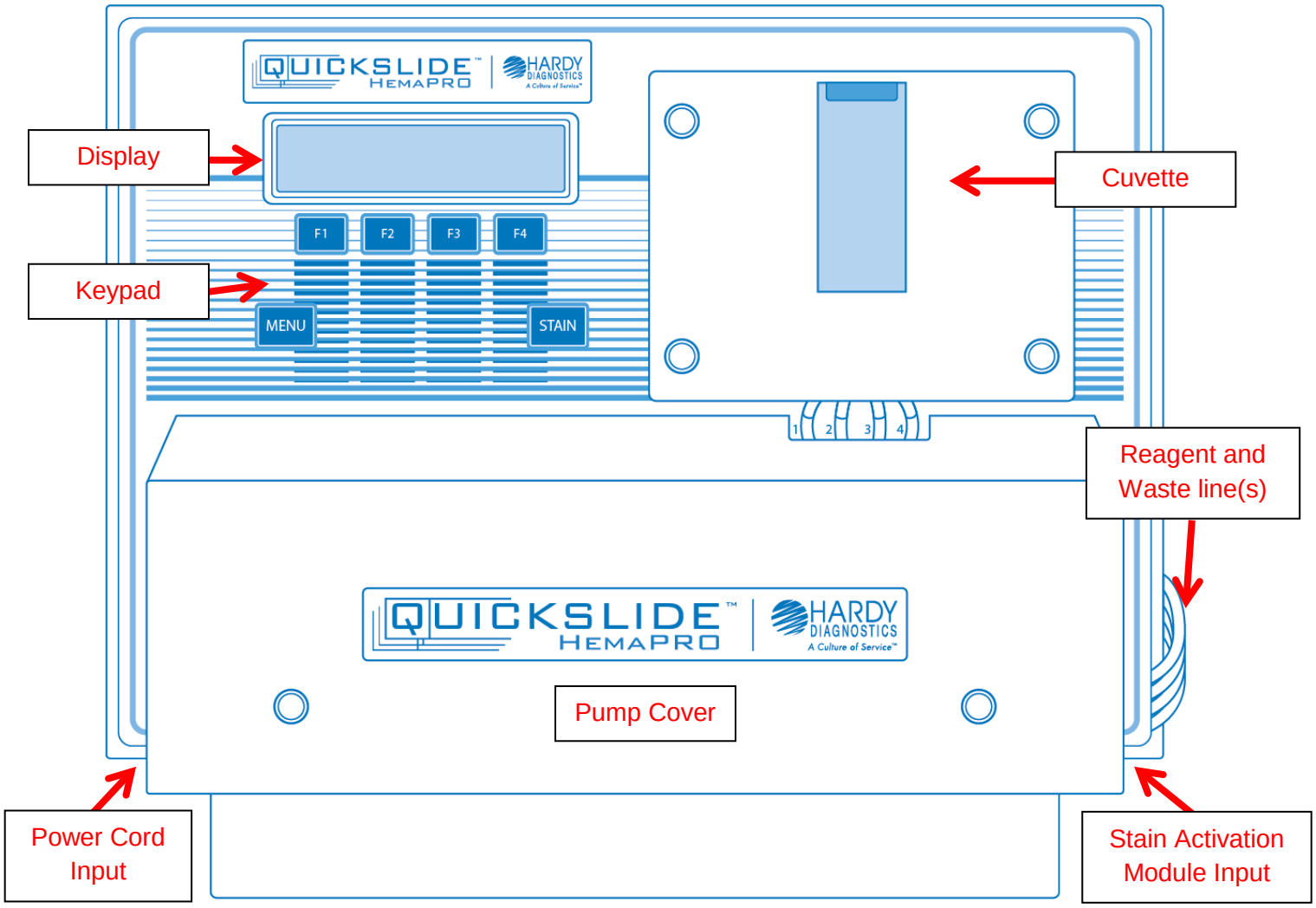

The basic anatomy of the HemaPRO is identified in the diagram above.
Please use this diagram to familiarize yourself with the common areas of the HemaPRO unit.

Display – User interface where options are presented.

Keypad – Contains F1, F2, F3, F4, Menu, and Stain.

Cuvette – Houses the slide during the staining process.

Power Cord Input – The power cord plugs into the left side of the machine.

Pump Cover – Covers the reagent supply and waste drain pump rollers and tubing.

Reagent and Waste Line(s) – These lines wrap around the left side to the back of the unit. The HemaPRO Reagent Kit sits behind the instrument on the designated platform.

Stain Activation Module Input – The Stain Activation Module (included with the QuickSlide™ HemaPRO Reagent Kit) plugs into the right side of the unit.

8.0 Specimen Slide Preparation

8.1 Blood Specimen and Bone Marrow Specimen

Specimen smears shall be prepared based on the classical recommendations and following institutional procedures.

8.2 Methanol Fixation

Specimen fixation causes the cells to adhere to the glass slide to make possible the subsequent rinsing of the smear with water without the significant loss of cells. This can be accomplished by methanol fixation. For best results, it is required that the methanol method be used, rather than heat, since it is superior in preventing lysis, distortion, or damage to the cells in clinical material. Red blood cells and white blood cells will not be harmed, whereas heat may distort or disrupt the cells.

While recommended, the adoption of fixation procedure shall be at the discretion of the institution. For slides that will not be stained immediately and will be stored long term, the practice of methanol fixation is highly recommended.

8.2.1 Methanol Fixation Procedure

Air-dry the specimen at room temperature. Heat blocks are not recommended since it is extremely important that the specimen does not get damaged by excessive heat. Once fully dried, fix by submerging the slide in the Coplin jar filled with methanol for 30 seconds. Please ensure that the methanol covers the whole smear. Drain off remaining methanol without rinsing by tapping the bottom edge of the slide to a paper towel and allow the slide to air dry at room temperature. Do not apply heat after the methanol dries.

> **NOTE:** Because the slide preparation technique can vary from institution to institution and technique is not always controllable (i.e., differences in smear thickness, fixation techniques, drying time, specimen adherence to different types and brands of slides, etc.). Rare instances of carryover of specimen from slide to slide can occur. The chance of this can be minimized by carefully following the instructions in this manual.

9.0 Unit Installation

If you are installing your instrument for the first time, please use the following guide to ensure proper set-up. For this setup, the unit will need to be powered off, and you will need to have a HemaPRO Reagent Kit on hand.

9.1.1 Remove the two thumb screws to open the front panel that is covering the pump tube rollers.

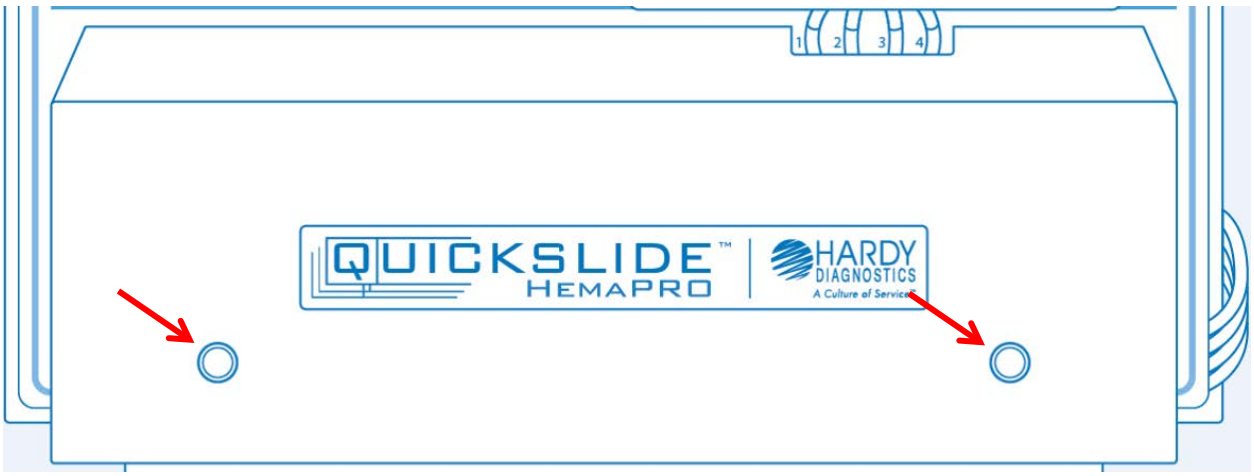

9.1.2 Attach all four orange pump tubes around their pump rollers.

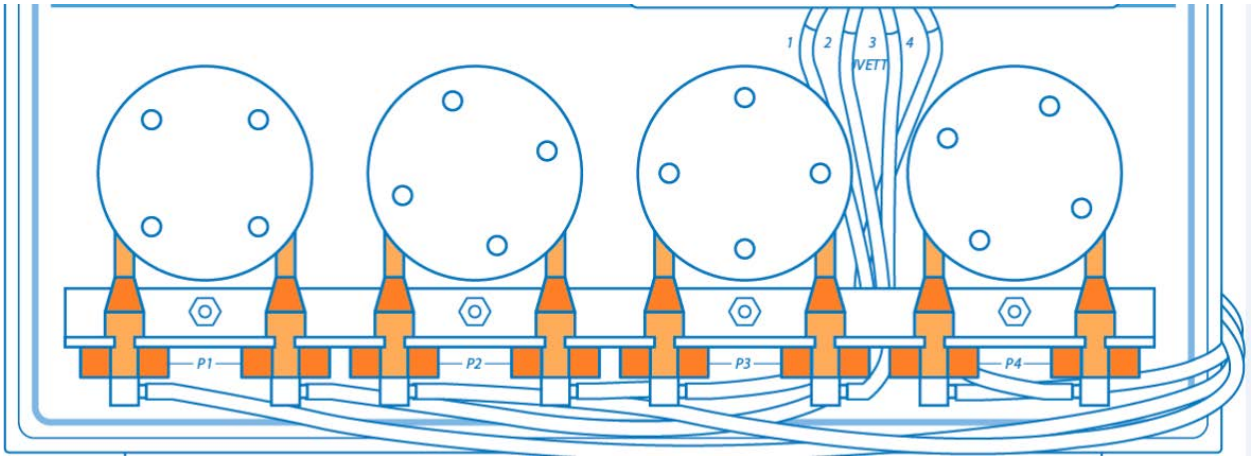

9.1.3 Open the HemaPRO Reagent Kit . Remove the cap from each reagent bottle, and pierce the induction seal on the opening of each bottle with a sterile needle.

9.1.4 Separate all four of the clear lines and check the integrity of the lines, making sure there are no significant kinks or cracks in the tubing. Wipe the ends of the four color coded cannulas with an alcohol swab and insert them into the corresponding bottles of reagents, where the puncture was made. Use the puncture as the aperture for the cannula.

9.1.4.1 Place the "**Stain**" line that has a **blue tag** into the Wright-Giemsa Stain bottle.

9.1.4.2 Place the "**Rinse**" line that has a **white tag** into the Wright-Giemsa Rinse bottle.

9.1.4.3 Place the "**Buffer**" line that has a **green tag** into the Wright-Giemsa Buffer bottle.

9.1.4.4 Place the "**Waste**" line that has a **red tag** into an established waste disposal container. Waste disposal regulations vary according to jurisdiction. Please dispose of waste according to your facility and local regulations.

9.1.5 Remove the Stain Activation module (the short cord that resembles a phone cord) from the HemaPRO reagent kit box. Connect the Stain Activation module to the receptacle on the right-hand side of the instrument.

NOTE: If the Stain Activation module is not plugged in when the unit is turned on, the message "**SELF-TEST FAILURE: Pack not connected**" will appear. Turn unit off, connect Stain Activation module and turn unit on to continue.

```
Self Test Failure:
Pack not connected
```

The HemaPRO will only accept stain packs with an included module sold by Hardy Diagnostics QuickSlide™ to ensure optimal results. The instrument is calibrated only for these reagents. The use of other stain packs or solutions will produce unreliable results and will void the warranty.

9.1.6 Plug the power cord into the left-hand side of the instrument, directly above the on/off switch. Make sure the power is turned off and then plug the wall transformer into the wall.

9.1.7 Power the instrument on. The instrument will boot with a Hardy Diagnostics splash screen showing the unit's software revision, and immediately perform a self-test.

```
Hardy Diagnostics
Rev 2.m COPYRIGHT'16
```

```
SYSTEM SELF TEST
-in process-
```

```
SYSTEM SELF TEST
-pass-
```

9.1.8 Once the Self-Test is finished, the cuvette will perform a precautionary drain cycle, and boot into the Main Menu.

```
Draining Cuvette
```

```
Evaluation RPM B
GG&B in house burnin
```

Main Menu

```
Cycles Remaining 125
F1=Prime    F4=Cont.
```

9.1.9 Before using the instrument, you will need to **<F1> Prime** the unit twice.

NOTE: For every new tubing kit that has been installed on the HemaPRO, a double Prime will be required. This is to ensure that all reagent lines are properly filled and ready for staining.

10.0 User Operation

General Guidelines

- **Do not** place HemaPRO Reagent kit above or below the instrument.
- **Do not** place the slide in the cuvette unless the display instructs you to do so.
- Use high quality, clean slides (Cat. No. PF72P). Slides with different thickness may show variable staining results.
- If staining bone marrow specimen, ensure the smear is methanol fixed and dried before placing into the cuvette. Please see Methanol Fixation Procedure listed under Specimen Slide Preparation.
    - **Do not** subject the slide to heat fixation before or after staining.
- The unit's Tubing Kit (Cat. No. HP1RT) is to be replaced every six (6) months. Refer to User Maintenance for step by step procedure for replacing the tube kit.
- Do not leave the stained slide in the cuvette for an extended period of time as this could result in an altered stain quality.

10.1 The Staining Process

Main Menu

```
Cycles Remaining 125
F1=Prime    F4=Cont.
```

10.1.1 Press **<F4> Cont.** to continue to the Slide Type screen.

```
 Choose Slide Type:
F1=Blood   F4=Marrow
```

10.1.2 Choose your slide type by pressing either **<F1> Blood** for a blood smear or **<F4> Marrow** for a bone marrow smear. Your decision will determine which default timing will be used.

NOTE: The default factory setting for **blood specimen** is a 30 second stain and a 30 second buffer.
The default factory setting for **bone marrow specimen** is a 255 second stain and a 255 second buffer.

```
To Prepare Cuvette:
(F1=back)   Press F4
```

10.1.3 The unit will now prompt you to prepare the cuvette before inserting the slide. Continue to prepare the cuvette by pressing **<F4>**.

```
      WAIT !!!
  Preparing Cuvette
```

NOTE: "Preparing" will fill the cuvette about half way with stain. Once filled, the below screen will show.

```
NOW load slides THEN
press STAIN to Time!
```

10.1.4 When prompted, you may now load the slide into the cuvette with the specimen facing out towards the front (facing you). Once the slide has been placed inside the stain filled cuvette, immediately press the **<Stain>**. The unit will proceed to stain the slide, followed by the buffer, and quick rinse of the slide.

10.1.5 When the staining process is complete, promptly remove the slide from the cuvette and press the **<F4> Cont.** to continue to the Main Menu.

```
Done:  Remove Slides
      F4=Cont.
```

NOTE: **DO NOT** leave the slide in the cuvette after staining. The stain quality is best when the slide is promptly removed from the cuvette and allowed to air dry.

Main Menu

```
Cycles Remaining 124
F1=Prime    F4=Cont.
```

NOTE: When the unit returns to the Main Menu, your cycle count will be reduced by 1.

10.1.6 Wipe the back side of the slide and let it completely air dry before viewing the slide under the microscope. Alternatively, you can use bibulous paper for blotting (Cat. No. 28511007).

11.0 Menu Navigation

The HemaPRO has five (5) menu options from the Main Menu, each of which will be explained below. Each Menu screen follows a linear path; to proceed through the different Menu screens, you will need press the **<Menu>** button consecutively. To "go back" a screen will require you to cycle through the five (5) menu options until you locate your desired Menu option.

Upon first press of the Menu button, you will see the splash screen shown below. No further action can be taken from this screen. Please continue to the next section.

<Menu> #1

```
EVALUATION RPM B
GG&B in house burnin
```

11.1 Alter Timing for Stain and Buffer

11.1.1 A second press of the **<Menu>** button will allow you to alter Stain times for either **<F1>** Blood or **<F4>** Bone Marrow.

<Menu> #2

```
Alter Stain Timing
F1=Blood   F4=Marrow
```

11.1.2 A third press of the **<Menu>** button will allow you to alter the Buffer times for either **<F1>** Blood or **<F4>** Bone Marrow.

<Menu> #3

```
Alter Buffer Timing
F1=Blood   F4=Marrow
```

IMPORTANT:
The default factory setting for **blood specimen** is a 30 second stain and a 30 second buffer.
The default factory setting for **bone marrow specimen** is a 255 second stain and a 255 second buffer.

NOTE: Times may be altered depending on your lab's visual preference of the smear. If the stain and buffer times are adjusted to anything other than the factory settings, you will have to reset your customized stain and buffer times with the installation of each new reagent kit.

11.1.3 Stain and buffer times are changed in five second intervals. Press the blue **<F1>** to decrease staining times and press the green **<F2>** key to increase staining times. Press **<F4>** to save the custom stain and buffer times.

```
 Blood:  Time   30
F1=-  F2=+   F4=SAVE
```

```
 Marrow:  Time  255
F1=-  F2=+   F4=SAVE
```

NOTE: After the timing changes have been been saved, the screen will prompt you to **Choose Slide Type** to run a stain cycle (below). If you would like to proceed back to the Main Menu, you will need to cycle through the Menu screens until you arrive at the final "Exit Menu" screen, as described in Exiting the Menu Options.

```
 Choose Slide Type:
F1=Blood   F4=Marrow
```

11.2 Sound Settings

11.2.1 A fourth press of the **<Menu>** button will bring you to the sound setting options menu. Press the **<F1>** button to turn the alerts off or the **<F4>** button to keep the alerts on.

<Menu> #4

```
    Sound Beeps?
F1=No         F4=Yes
```

NOTE: It is not recommended that the systems sound be turned off, as these alerts are meant to inform the technician when the machine needs attention.

NOTE: After the sound setting has been saved, the screen will prompt you to **Choose Slide Type** to run a stain cycle (below). If you would like to proceed back to the Main Menu, you will need to cycle through the Menu screens until you arrive at the final "Exit Menu" screen, as described in Exiting the Menu Options.

```
 Choose Slide Type:
F1=Blood   F4=Marrow
```

11.3 Exiting the Menu Options

11.3.1 If you would like to proceed back to the Main Menu, you will need to cycle through the Menu screen until you arrive at the final Exit Menu screen (below).

<Menu> #5

```
     Exit MENU?
F1=No         F4=Yes
```

11.3.2 Pressing **<F4>Yes** will direct you back to the Main Menu by first showing the following screen:

```
  Evaluation RPM B
GG&B in house burnin
```

Main Menu

```
Cycles Remaining 125
F1=Prime    F4=Cont.
```

12.0 User Maintenance

The HemaPRO offers consistent results by systematically staining, buffering, and rinsing the provided biological specimen. It is critical for the success of this automated process that these unique reagents are obtained from Hardy Diagnostics.

For quality control purposes, the HemaPRO Reagent Kit is labeled with Lot Number and Expiration Date. These values are used to track and identify the reagents used in the unit. The kit also comes with a Stain Activation Module, which has a Reference number and Lot Number as well. The unit tracks the number of stain cycles that a reagent kit performs through this Stain Activation Module.

NOTE: Please ensure that the Stain Activation Module is swapped with each new HemaPRO Reagent Kit that is installed on your machine. This module is plugged into the right side of the unit.

The HemaPRO will only accept stain packs with the Stain Activation Module sold by Hardy Diagnostics to ensure optimal results. The instrument is calibrated only for these reagents. The use of other stain reagents or solutions will produce unreliable results and will void the warranty.

12.1 Reagent Kit Installation

The Wright's- Giemsa reagents (Stain, Rinse, and Buffer) are supplied to the unit through the tubing's cannula connected to the individual containers. Each tube cannula is clearly labeled, and must be inserted into the correct reagent container. The waste tube should be placed into a customer designated waste container according to your local city and county regulations for waste disposal. Use care to ensure each line is properly connected before powering on the HemaPRO unit.

12.1.1 Power the instrument off.

12.1.2 Open the HemaPRO Reagent Kit. Remove the cap from each reagent bottle, and pierce the induction seal on the opening of each bottle with a sterile needle.

NOTE: Do not remove the inductions seal on these bottles.

12.1.3 Relocate the cannulas from the old kit into correct bottles of reagent on the new kit, where the puncture was made in the seal. Use the puncture as an aperture for the cannula to fit through.

12.1.3.1 Place the "**Stain**" line that has a **blue tag** into the Wright-Giemsa Stain bottle.

12.1.3.2 Place the "**Buffer**" line that has a **green tag** into the Wright-Giemsa Buffer bottle.

12.1.3.3 Place the "**Rinse**" line that has a **white tag** into the Wright-Giemsa Rinse bottle.

12.1.4 Remove the Stain Activation Module (the short cord that resembles a phone cord) from the HemaPRO reagent kit box. Connect the Stain Activation Module to the receptacle on the right-hand side of the instrument.

NOTE: If the Stain Activation Module is not plugged in when the unit is turned on, the below message will display, accompanied by an audio alert. Turn unit off, connect Stain Activation module and turn unit on to continue.

```
Self Test Failure:
Pack not connected
```

12.1.5 Power the instrument back on. The instrument will continue with its normal boot cycle, and will land upon the Main Menu, below:

Main Menu

```
Cycles Remaining 125
F1=Prime    F4=Cont.
```

12.1.6 Before using the instrument, you will need to **<F1> Prime** the unit twice.

NOTE: For every new reagent kit and tubing kit that has been installed on the HemaPRO, a double Prime will be required. This is to ensure that all reagent lines are properly filled and ready for staining.

12.2 Stain Activation Module

The HemaPRO is programmed to display two different warning screens related to the Stain Activation Module. Please review the descriptions below to understand how each screen differs and how to address these warnings.

12.2.1 Reagent Pack Empty

```
Reagent Pack Empty
change pack F4=Cont.
```

The Reagent Pack Empty screen will display once the cycle count reaches zero. This screen will be accompanied by a steady audio alert. You may notice the format of the Main Menu will change to emphasize the low amount of cycles remaining once the unit hits 20 cycles remaining, below:

Main Menu (125 – 21 cycles)

```
Cycles Remaining 125
F1=Prime    F4=Cont.
```

→

Main Menu (20 or fewer cycles)

```
20 Cycles Remaining!
F1=Prime    F4=Cont.
```

To address the Reagent Pack Empty notice, a new HemaPRO Reagent kit will need to be installed. Please see refer to Reagent Kit Installation for this procedure.

12.2.2 Self-Test Failure

```
Self Test Failure:
Pack not connected
```

The Self-Test Failure screen will display if the unit either does not detect the Stain Activation Module, or if the Stain Activation Module is not plugged into the HemaPRO. This screen will also be accompanied by a steady audio alert. This screen may be addressed by ensuring the Stain Activation Module is plugged into the unit.

If you receive this warning while the Stain Activation Module is plugged into the unit, please power the unit off, and unplug the Stain Activation Module. Make sure there is no blockage or stain on the connector or the connection port on the unit. Reattach the Stain Activation Module and power the unit on.

If you continue to receive the Self-Test Failure screen, please contact Hardy Diagnostics Technical Support via phone at (800) 266-2222 (ext. 2), or TechService@hardydiagnostics.com, and a Technical Support Representative will assist you.

12.3 Tubing Kit Replacement

The orange pump tubes and the clear lines with color coded cannulas must be replaced every six (6) months to ensure the HemaPRO is operating under optimal conditions. The following steps will guide you through replacing the tubing on your HemaPRO unit.

You may also view our video available on Hardy Diagnostics's YouTube page for additional assistance:

HemaPRO Tube Replacement - https://www.youtube.com/watch?v=ntmFMWqefqI

To begin this procedure:

12.3.1 Empty the waste container. Be sure the line labeled "**Waste**" remains in the waste container after it has been emptied.

12.3.2 Remove the three reagent cannulas labeled "**Stain**", "**Buffer**", and "**Rinse**" from their respective bottles and wipe each cannula with an isopropyl alcohol wipe. Hold them all at the opening of the empty waste container.

NOTE: The three reagent cannulas should not be placed in the waste container, as they may pull back in the fluid that was just expelled from the waste line.

From the Main Menu:

```
Cycles Remaining 125
F1=Prime    F4=Cont.
```

12.3.3 Proceed to run two (2) prime cycles by pressing **<F1>Prime** while these cannulas are suspended above the waste container. The purpose of this step is to purge all remaining fluid from the tubing kit.

12.3.4 With all tubes now empty, power the instrument off.

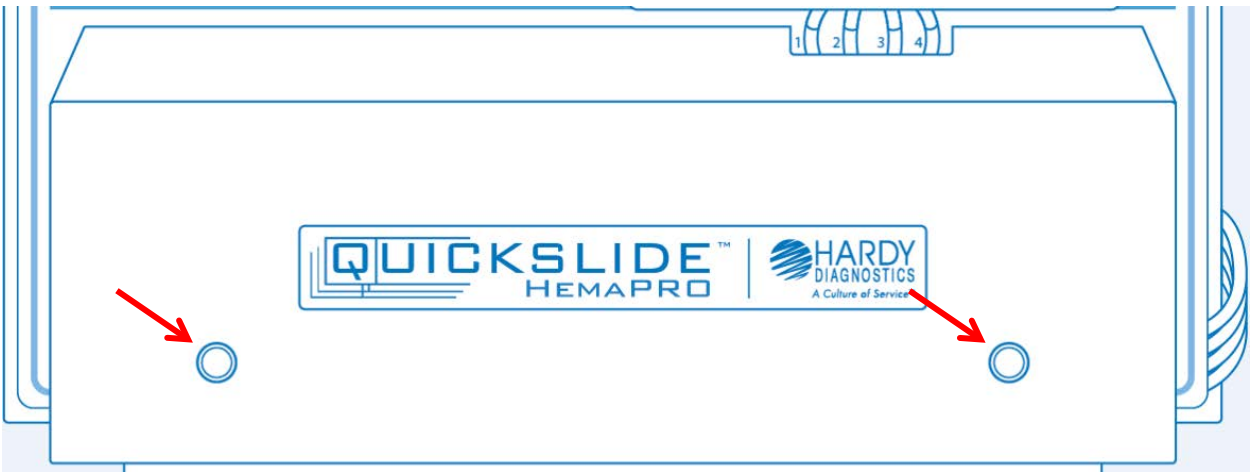

12.3.5 Unscrew the two (2) thumbscrews holding the front panel pump cover in place. This will expose the four pump tube rollers, the orange pump tubes, and the reagent/waste lines.

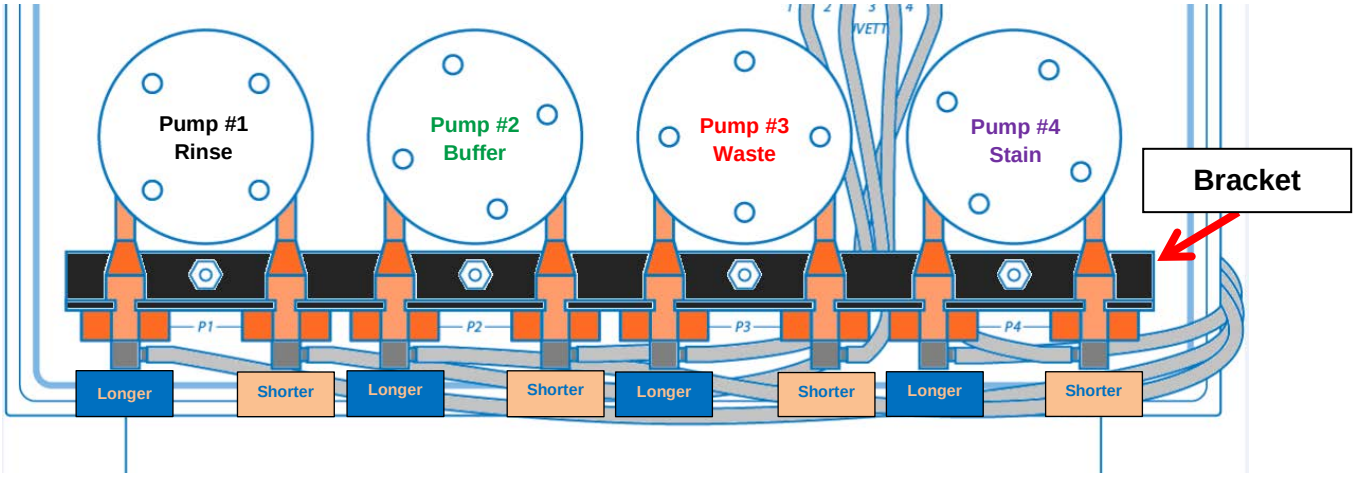

NOTE: Please use the above diagram to assist you when replacing the tubes from the pump rollers. Notice that all "elbow" connection labeled as "**Shorter**" connect to the bottom of the cuvette.

12.3.6 Remove the orange pump tubes off of each roller so that they are hanging off of the roller, but still held inside of the black metal bracket.

12.3.7 Cut the four (4) zip-ties that are holding the clear tubing together. One (1) may be found between Pump #3 and Pump #4, and three (3) are located along the back of the instrument.

12.3.8 Starting from the left side of the unit, (**Pump #1, Rinse**) pull the inverted orange “T” from the orange pump tube so that it is free from the black metal bracket.

12.3.9 Using a hemostat or forceps (tweezers), place them underneath the base end of the clear tubing where they connect to the cuvette. Using light force, pry the clear tubing downward off of the metal hypotube at the base of the cuvette.

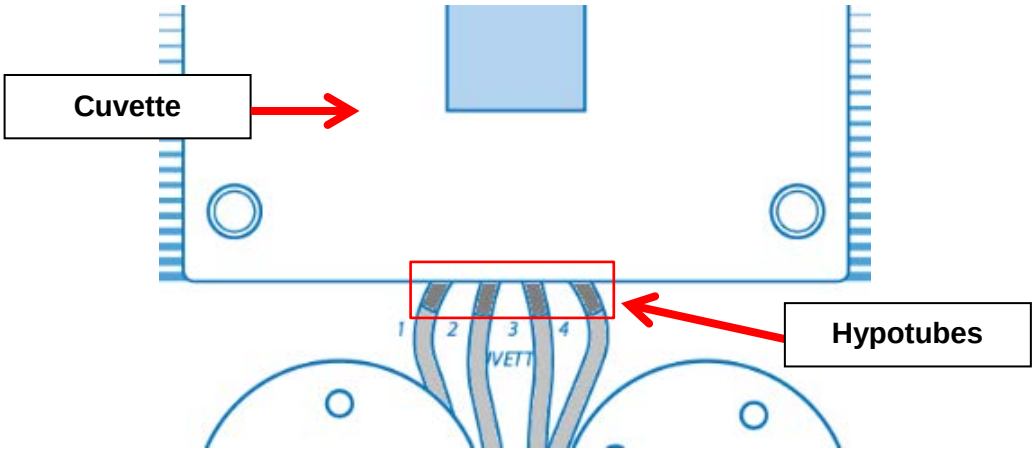

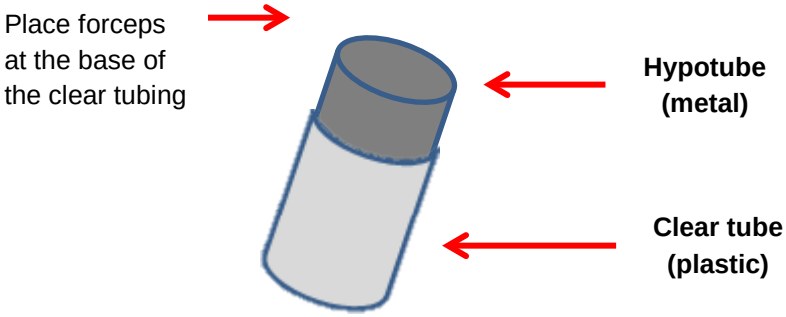

12.3.10 Wiggle the clear lines down off the hypotubes at the same time you are using the hemostat or forceps to completely remove the clear tubes from the machine.

DO NOT PULL using excessive force on the clear tubing as this may cause the metal hypotubes to break from the cuvette.
DO NOT USE a lubricant to remove or replace clear tubing. This will cause poor friction to hold the clear tubing in place, and cause leakage from the tubes during the staining process.

12.3.11 Replace the tube sets **one at a time**, starting from left to right. The longest lines for each reagent are to be positioned on the left side of the orange pump tubes, and the shorter lines on the right side of the pump tubes (as demonstrated in the diagram). Pull the shorter tube of each line through the black metal bracket's hole and connect to the correct hypotube at the base of the cuvette.

12.3.12 After installation, reapply the provided zip ties to maintain good tubing management, so the tubing does not get in the way of the pumps. One (1) may be placed between Pump #3 and Pump #4, and three (3) are to be placed along the back of the instrument.

12.3.13 Power the instrument on.

12.3.14 The unit will now need to be primed twice. Press **<F1> Prime** to begin the priming process. Once the first cycle has completed, you will need to prime once more.

> **NOTE:** For every new tubing kit that has been installed on the HemaPRO, a double Prime will be required. This is to ensure that all reagent lines are properly filled and ready for staining.

12.3.15 The unit's fill calibrations will need to be reset, according the Setting Fill Levels, in the following section.

12.4 Setting Fill Levels

The calibration for fill on this unit is intended to be set for a standard 1”x3”x1mm glass slide. We recommend using ProSlide™ Frosted Microscope Slides (PF72P).The fill levels can be customized to fit the operator’s preferences. We recommend a fill level reset after each new tubing kit installation. The following steps will guide you through recalibrating the fill level on your HemaPRO unit after a tubing change.

You may also view our video available on Hardy Diagnostics’s YouTube page for additional assistance:

HemaPRO Set Fill Levels - https://www.youtube.com/watch?v=90IUWF10Jhs.

Fill levels set without a 1”x3”x2mm slide inserted in the cuvette during programming will result in incorrect fill levels. This will lead to overflow of the reagents onto the operating area. This can lead to possible damage of the unit’s surroundings.

12.4.1 Ensure the unit has been primed twice, as explained in Tubing Kit Replacement (step 14) before resetting fill levels.

12.4.2 Power the instrument off.

12.4.3 Place a blank 1”x3”x1mm slide into the cuvette. A slide must be loaded before fill levels can be adjusted.

12.4.4 While the machine is off, hold down the **<F4>** button.

12.4.5 While still holding the **<F4>** button, power the instrument back on and release the **<F4>** button.

```
  Set Fill Volume?
F1=No         F4=Yes
```

12.4.6 Once the instrument is powered back on, you will see the above service screen. Select the **<F4>Yes** button to proceed.

NOTE: Selecting **<F1>No** will return you to the Main Menu.

```
  Press:
F1=Drain     F4=Fill
```

12.4.7 You will now see the above screen, instructing to either **<F1>Drain** or **<F4>Fill** the cuvette. If the cuvette has any residual fluid remaining, press and hold the **<F1>Drain** button until it has emptied completely. When cuvette is completely empty, press the **<F4>Fill** button, this will set the "empty" level for the cuvette.

```
  Press:
F2=Stain F4=Rins/Buf
```

12.4.8 You will now be presented with the above screen. The fill level is set individually for the Stain, and together for the Rinse/Buffer.

> **NOTE**: When setting the Stain and Rinse/Buffer levels, you must **press and hold** the button down rather than a press-and-release.

12.4.9 Begin with the setting the Stain calibration. With the slide still in cuvette, **press and hold** the **<F2>Stain** button until the cuvette fills up to the desired level. **Release** the **<F2>Stain** button when the desired Stain fill level has been met. Once you release the button, the screen will then revert back to the **<F1>Drain** or **<F4>Fill** screen below.

```
  Press:
F1=Drain     F4=Fill
```

12.4.10 The cuvette will currently be filled with stain. **Press and hold** the **<F1>Drain** to drain the cuvette until it is empty. You will see the stain drain from the waste line (hypotube #3) underneath the cuvette. Once the cuvette is completely empty, press the **<F4>Fill** button to proceed to set the rinse/buffer level.

```
  Press:
F2=Stain F4=Rins/Buf
```

12.4.11 You will once again be on the above screen. With the slide still in cuvette, **press and hold** the **<F4>Rins/Buf** button until the cuvette fills up to the desired level with Rinse. Release the **<F4>Rins/Buf** button when the desired Rinse fill level has been met. Once you release the button, the screen will then revert back to the **<F1>Drain** or **<F4>Fill** screen once again.

NOTE: Only the rinse is pulled into the cuvette when setting the rinse/buffer levels; however this setting syncs across both reagents simultaneously.

```
  Press:
F1=Drain     F4=Fill
```

12.4.12 **Press and hold** the **<F1>Drain** button to drain the cuvette until it is empty. You will notice the rinse draining from the waste line (hypotube #3) underneath the cuvette.

12.4.13 Once the stain and rinse/buffer levels are set, you can save the new fill levels by pressing the **MENU** button. The unit will automatically save the fill levels and cycle back to the Main Menu.

12.5 Purging the Stain Line

The HemaPRO operates as intended when the Stain line is completely empty, and the Buffer and Rinse lines are primed with their respective reagents. Normal operation of the HemaPRO will **pull** stain fresh from the bottle for every cycle, and **purge** the Stain line when the cycle is complete.

If you find the Stain line is primed, either partially or entirely, the line can be purged by simply power-cycling the instrument. Doing so will initiate the unit's Self-Test, which will run the Waste pump (Pump #3) followed by the purging the Stain line (Pump #4).

12.6 Hardy Diagnostics QuickSlide™ Service Request

If a problem is encountered that is beyond the scope of this manual or additional assistance is required, please contact our QuickSlide™ Technical Support Team via phone at (800) 266-2222 (option 2), or via email at TechService@hardydiagnostics.com.

13.0 Safety Data Sheets

Safety Data Sheets (SDS) for any associated reagents kits can be found at www.HardyDiagnostics.com/SDS/.

14.0 References

1. *Samples for Hematology*. 2014. Cornell University College of Veterinary Medicine, Ithaca, NY.

2. Lee, S.H., et al. 2008. ICSH Guidelines for the standardization of bone marrow specimens and reports. *International Journal of Laboratory Hematology*.

15.0 HemaPRO Warranty

Hardy Diagnostics will repair or replace the instrument under the terms and conditions of this warranty. The liability of Hardy Diagnostics under this warranty, whether in contract, tort, or otherwise, shall not, except as expressly provided herein, exceed Buyer's purchase price on which such liability is based. Please note that:

- Repaired units will be given the latest software upgrades.
- Shipping charged to and from the buyer will be provided by Hardy Diagnostics.
- Travel costs are not included as part of warranty.
- Extended warranties do not include the routine replacement of the tube sets.

Hardy Diagnostics shall not be obligated under this warranty if the need for repairs or replacements results from Buyer's or end users' failure to operate and maintain the system as specified in the operating manual. Hardy Diagnostics shall not be responsible for results generated from or damage caused by Buyer's or end users' use of third party reagents or use of third party maintenance services.

This warranty does not cover any claims, actions, losses, damages, demands, liabilities, costs or expenses, including attorney's fees or expenses, whether a suit or other proceeding is initiated or not, which may arise from, but not limited to, the following events: (i) misrepresentations made by Buyer, (ii) any neglect by Buyer or end-users, (iii) Buyer's or end-users' use of products not in compliance with published specifications which are not for their intended purposes, (iv) Buyer's or end-users' modifications or alterations of products, (v) damage from Buyer or end-user misuse, or operation outside of the environmental specifications for the products, (vi) any other act, or failure to act, not in accordance with the terms and conditions of this warranty by Buyer or end user, and (vii) any condition listed below which would invalidate this warranty.

Any of the following conditions shall invalidate the warranty:

i. Buyer's or end users' failure to properly perform the maintenance required in the operator's manual.
ii. Repairs by persons other than Hardy Diagnostics service personnel, unless authorized in writing by Hardy Diagnostics personnel.
iii. Replacements with other than genuine QuickSlide™ parts.
iv. Buyer's or end users' negligence or negligent operation of the System.
v. Unauthorized alterations or modifications to the System or software.
vi. Removal of the protective case without service authorization.
vii. Use of reagents other than those provided by Hardy Diagnostics.
viii. Use of specimen fixation methods other than methanol fixation.
ix. Broken glass slides in tubing, cuvettes, or the waste ports as an outcome of buyer or end user negligence.

Buyer waives their Implied Warranty if Buyer fails to use the slides, reagents, and other accessories, as directed by Hardy Diagnostics, with our staining instruments, or fails to follow

the defined operating procedures. Use of any unauthorized slides, reagents, or accessories in our staining instruments or failure to follow the defined operating procedures, could produce erroneous results. Hardy Diagnostics is not liable for any damages, financial or otherwise, caused by the use of unauthorized slides, reagents, or accessories, or as a result of not following the defined operating procedures. HARDY DIAGNOSTICS HEREBY EXCLUDES AND IN NO EVENT SHALL BE LIABLE TO BUYER OR END USER FOR SPECIAL, INDIRECT, OR CONSEQUENTIAL DAMAGES, INCLUDING BUT NOT LIMITED TO LOST PROFITS.

All other components are covered, granted the user follows the operating instructions. Refer to our Domestic Terms and Conditions at www.HardyDiagnostics.com/terms-conditions and our International Terms and Conditions at www.HardyDiagnostics.com/international-terms-conditions for additional information.

Hardy Diagnostics represents and warrants to Buyer that all products shipped by Hardy Diagnostics to Buyer, as of the date of such shipment, shall conform in all material respect to the specifications last published at www.HardyDiagnostics.com before the time of shipment of the products. HARDY DAIGNOSTICS MAKES NO OTHER WARRANTIES TO BUYER, EXPRESS OR IMPLIED, AND HEREBY EXPRESSLY DISCLAIMS ANY WARRANTY OF MERCHANTABILITY OR FITNESS FOR A PARTICULAR PURPOSE.

How Long Coverage Lasts: This warranty lasts for a period of twelve (12) months from the time of original instrument shipment, except for products that have an expiration date, in which case the warranty lasts until the expiration date. When an instrument warranty expires or is close to expiration, buyers may purchase up to four (4) successive extended warranty renewals each covering a period of twelve (12) months from the date of purchase of the extended warranty.

How to Get Service: In order to be eligible for service under this warranty, the problem must be reported to Hardy Diagnostics in writing within five business days after it becomes apparent while the warranty is in effect, provided an opportunity is afforded for examination by Hardy Diagnostics.

Governing Law: This warranty shall be governed by the Uniform Commercial Code as adopted in the State of Wyoming.

16.0 HemaPRO Training Checklist

Trainee Name: _____

Refer to the user manual for each item on this checklist. Enter trainee's initials for each item trained.

Trainee's Initials

_____ Unit Installation (Section 9.0)

_____ HemaPRO Reagent Kit installation with Stain Activation Module (Section 12.1 - Section 12.2)

_____ Specimen Slide Preparation (Section 8.0)

_____ Operation Guidelines (Section 10.0)

_____ Menu Navigation (Section 11.0)

_____ Alter Timing for Stain and Buffer (Section 11.1)

_____ Stain Activation Module (Section 12.2)

_____ Tubing Kit Replacement (Section 12.3)

_____ Setting Fill Levels (Section 12.4)

Trainee Signature: _____ Date: _____

Trainer Signature: _____ Date: _____